Brazilian Journal
of Chemical
Engineering

ISSN 0104-6632
Printed in Brazil
www.abeq.org.br/bjche

Vol. 29, No. 04, pp. 795 - 806, October - December, 2012

SYNTHESIS OF ^{15}N-ENRICHED UREA ($CO(^{15}NH_2)_2$) FROM $^{15}NH_3$, CO, AND S IN A DISCONTINUOUS PROCESS

C. R. Sant Ana Filho*, A. L. R. M. Rossete, C. R. O. Tavares,
C. V. Prestes and J. A. Bendassolli

Center for Nuclear Energy, University of São Paulo – CENA/USP, Stable Isotopes Laboratory,
Phone: + (55) (021) (19) 34294770, Fax: + (55) (021) (19) 34294641, PO Box 96,
Zip Code: 13400-970, Piracicaba - SP, Brazil.
E-mail: santana@cena.usp.br

(Submitted: January 24, 2012 ; Revised: April 30, 2012 ; Accepted: May 17, 2012)

Abstract - $CO(^{15}NH_2)_2$ enriched with the stable isotope ^{15}N was synthesized based on a reaction involving CO, $^{15}NH_3$, and S in the presence of CH_3OH. The method differs from the industrial method; a stainless steel reactor internally lined with polytetrafluoroethylene (PTFE) was used in a discontinuous process under low pressure and temperature. The yield of the synthesis was evaluated as a function of the parameters: the amount of reagents, reaction time, addition of H_2S, liquid solution and reaction temperature. The results showed that under optimum conditions (1.36, 4.01, and 4.48 g of $^{15}NH_3$, CO, and S, respectively, 40 ml CH_3OH, 40 mg H_2S, 100 °C and 120 min of reaction) 1.82 g (yield 76.5%) of the compound was obtained per batch. The synthesized $CO(^{15}NH_2)_2$ contained 46.2% N, 0.55% biuret, melting point of 132.55 °C and did not exhibit isotopic fractionation. The production cost of $CO(^{15}NH_2)_2$ with 90.0 at. % ^{15}N was US$ 238.60 per gram.
Keywords: Reactor; Stable isotope; ^{15}N; Enriched compounds.

INTRODUCTION

Urea ($CO(NH_2)_2$) is a solid product in the shape of pearls or grains; its main characteristic is N in the form of an amide (NH_2). The compound is commercially synthesized by a reaction of ammonia (NH_3) and carbon dioxide (CO_2) under conditions that are dependent on the technology employed in the industrial plant. In the majority of the processes, the synthesis reaction is performed in the liquid phase (solution) under a pressure of 13 to 25 MPa and at a temperature of 170 to 200 °C. The process requires special equipment because of the working conditions and specific characteristics of the reaction (high corrosiveness and tendency to crystallize). In addition, urea synthesis is a multi-stage process that involves a large capital investment and consumes a large amount of energy (Karmazinov *et al*., 1971; Macdowell Junior, 1974; Kucheryavyi *et al*., 1976). A complete survey of the production technologies (operational systems and equipment) has been published by Chao (1967) and later by Uchino (1986) and Stamicarbon Staff (1986).

Currently, $CO(NH_2)_2$ production is a very important process that is practiced in various countries, and there are approximately 700 plants of different capacities. Worldwide production has reached 134.7 million tons per year, of which 49% is produced in China and India (Franco *et al*., 2007). $CO(NH_2)_2$ synthesis from NH_3 and CO_2, which are produced in the same unit, makes the product less onerous because the compound contains a high N

*To whom correspondence should be addressed

content (46%) compared with other nitrogen fertilizers. This high nitrogen content provides an attractive price per ton.

The synthesis of $CO(NH_2)_2$ in a discontinuous system involving a chemical reaction between CO (carbon monoxide), NH_3 (ammonia), and S (sulfur) at a temperature of 100 °C in the presence of CH_3OH (methanol) is an alternative method for urea production compared to the conventional process. This procedure was initially performed on a laboratory (or pilot) scale in an A-4 type reactor (spec. 94-40376) with a volume of 1.8 L (Franz and Applegath, 1961). The influence of temperature and amount of reagents on the yield in this method was evaluated. According to the results, a decrease in the reaction temperature from 100 to 70 °C promoted a small increase in the reaction time of S in the formation of COS (carbonyl sulfide); however, it produced a significant increase in the production time of $CO(NH_2)_2$. Amounts of 10.9 g of NH_3, 9.8 g of S, 8.7 g of CO, 0.6 g of H_2S, and 35 ml of CH_3OH were used, and approximately 13.5 g of $CO(NH_2)_2$ was produced, which represents a 73% yield.

An alternative method has been used to synthesize $CO(NH_2)_2$ under mild temperature (100 °C) and pressure (1.4 to 2.07 MPa) conditions in a continuous industrial process (Monsanto Chemical Company, 1961). The reaction between NH_3, CO, S, CH_3OH, and H_2S (hydrogen sulfide) was performed in a stainless steel reactor in a countercurrent system with recycling. The product ($CO(NH_2)_2$), which was obtained in the crystalline form, displayed a chemical purity of 99.6%, and H_2S was produced as a by-product. The H_2S was converted to S (sulfur) in a recovery-and-reuse plant. The feed solution composition that displayed the most satisfactory results consisted of 20.72% CO, 20.45% NH_3, 3.1% H_2S, 15.22% S, and 40.51% CH_3OH. Under optimal operating conditions, the process yield in terms of NH_3 and S consumption was approximately 99% and for CO between 60-75%.

Studies on the preparation of $CO(^{15}NH_2)_2$ enriched with ^{15}N have been performed using an alternative method, and the synthesis reaction between $^{15}NH_3$, CO, and S under low pressures and temperatures has been investigated. The process was performed in a stainless steel reactor with a volume of 2 L that was equipped with a heated jacket, a thermometer, and a glass container that was used as the reaction vessel. A magnetic agitation system was used to avoid the loss of reagent gases ($^{15}NH_3$ and CO). The reaction temperature was 100 °C at a pressure of 1.22 to 1.91 MPa with a reaction time of 3 h. The effects of an increased reaction time and the addition of H_2O at the end of the process were investigated. The yield of the base process (1 mol of $^{15}NH_3$, 1 mol of CO, 0.75 mol of S, a temperature of 100 °C, and a reaction time of 3 h) was 83%; the final product contained 0.1% biuret and 0.45-0.5% S, which would likely not present any problems in using the product (Stinson, 1975).

In Brazil, the synthesis of ^{15}N-labeled urea has been evaluated with a low enrichment (5 at. % ^{15}N) from the reaction between $^{15}NH_3$, CO, and S. In this study, a stainless steel reactor was used with a heating jacket, and a stainless steel manometer was used to determine the pressure of the system and regulate the amount of CO introduced into the reactor. Only a reaction temperature of 90 °C was evaluated for 90 min, and the obtained $CO(^{15}NH_2)_2$ exhibited a small degree of contamination of heavy metals from the walls of the reaction vessel (Bendassolli *et al*., 1989).

The thermodynamic aspects of $CO(NH_2)_2$ syntheses were evaluated using CO, S, and NH_3 as reagents. From this analysis, theoretical results were obtained for the conversion (%) of NH_3 to $CO(NH_2)_2$ as a function of the reaction temperature and for the equilibrium constant of the system at various temperatures (Bendassolli and Victoria, 1995). Although thermodynamic analysis indicated that the conversion of NH_3 to $CO(NH_2)_2$ was inversely proportional to the temperature, this result does not explain the kinetics of the reaction. Thus, at room temperature (25°C), an extremely long time is required to reach the reaction equilibrium (92.5% conversion).

Nitrogen and its isotopes are of great importance in the study of biological systems and participate in the majority of biogeochemical reactions (Fritz, 1989). In various fields of science, mainly in agricultural sciences (the fertility and chemical composition of the soil and plant nutrition) and in animal nutrition (IAEA, 1974), the isotopic technique employing ^{15}N-labeled urea has proven to be an important tool. A few studies published by Brazilian researchers are noteworthy (Gava *et al*., 2006; Faroni *et al*., 2007; Oliveira *et al*., 2007; Lange *et al*., 2009; Martha Junior *et al*., 2009). It should also be emphasized that there is an international tendency toward the use of stable isotopes in field studies whenever possible, which avoids the use of radiolabeled compounds in experiments of this nature (Zhao *et al*., 2001; Trivelin *et al*., 2002; Bendassolli *et al*., 1997).

A need exists in many research studies for the use of compounds that are highly enriched with the isotopes of interest because of isotopic dilution in the studied systems (Knowles and Blackburn, 1993). Until recently, these compounds were not produced in

Brazil or South America because of methodological complexities. Research involving these compounds requires that they be imported from the United States, Europe, or Asia (Sant Ana Filho *et al*., 2008).

From the above, considering the control over the methodology of isotopic separation and the importance of making other ^{15}N-enriched nitrogen compounds available for the country's researchers at lower-than-FOB prices, the objective of this study was the synthesis (in batches) of ^{15}N-enriched $CO(^{15}NH_2)_2$ (90 at. % ^{15}N), and to evaluate the parameters (amount of reagents, temperature, reaction time, addition of H_2S, and liquid solution) involved in the production process.

EXPERIMENTS

Gases (N_2, NH_3, and CO), Reagents and Isotopes (^{15}N)

Carbon monoxide (CO), ammonia (NH_3), and nitrogen (N_2), all with a chemical purity of 99.0%, were used. The tests to evaluate the parameters involved in the process were performed using NH_3 with a natural isotopic abundance (0.366 at. % ^{15}N) and an analytical grade reagent (chemical purity ≥ 99.5%).

Anhydrous $^{15}NH_3$ enriched with 90 at. % ^{15}N, which was produced in the Laboratory of Stable Isotopes of CENA/USP (Bendassolli *et al*., 2002), was used as the isotopic source for the synthesis of $CO(^{15}NH_2)_2$.

Synthesis of $CO(^{15}NH_2)_2$

Production of Hydrogen Sulfide (H_2S)

Figure 1 shows the complete system (vacuum line, reaction tube, and glass reservoir) used in the process for obtaining H_2S. The reagents (0.2g of FeS and 2.5 ml of H_2SO_4 (50% v/v)) were added in different sides of reaction tube (T_R). T_R was isolated with a tap (T_{13}).

The glass reservoir (R_1) for the H_2S storage and tube T_R were connected by a vacuum line, as shown in Figure 1. The vacuum was activated using a mechanical pump (BM) by opening, in sequence, taps T_2, T_3, T_4, T_6, T_{13}, T_7, and T_{12A}. After reaching approximately 10^{-3} MPa of pressure, T_6 and T_{13} were closed. T_R was removed and the reagents (FeS and H_2SO_4) were placed in contact with each other (reaction 1).

$$FeS_{(s)} + H_2SO_{4(l)} \rightarrow H_2S_{(g)} + FeSO_{4(s)} \quad (1)$$

In sequence, T_R was returned to the vacuum system. The taps T_6 and T_{13} were opened and the H_2S gas was transferred to R_1. After this process, the taps T_{12A}, T_7, T_6, T_{13}, T_4, T_3, and T_2 were closed, and the BM was turned off. R_1 and T_R were removed from the vacuum system and the residual solution, contained H_2SO_4, FeS, and $FeSO_4$ (byproduct of the reaction in T_R), was stored in an appropriate container, which was sent to a chemical waste management program.

The Process of Reactor Charging

Initially, sulfur (S) was added to the stainless steel reactor (internally lined with polytetrafluoroethylene - PTFE). The S amount (g) added was a function of the limiting reagent ($^{15}NH_3$ or CO) and based on the reaction stoichiometry (2). The reactor was closed and connected to the vacuum system (Figure 1), where vacuum was produced with a BM opening, in this order, T_2, T_3, T_4, T_8, T_9, and valve V_1 until 10^{-3} MPa of pressure was attained. After that, valve V_1 was closed, the reactor was placed in a cooling bath (ethanol and CO_2(s)) at a temperature of -74 °C. This procedure was performed to facilitate the transfer of $^{15}NH_3$, CO, and H_2S (gases) and CH_3OH (liquid solution) to the interior of the reactor.

$$2^{15}NH_3 + CO + S \rightarrow CO\left(^{15}NH_2\right)_2 + H_2S \quad (2)$$

The reservoirs containing CH_3OH (R_2), H_2S (R_1), and $^{15}NH_3$ (R_3) were connected to the synthesis reactor, through V_2, V_3 e V_4, using stainless steel tubes (Ø ¼) and sphere-shaped valves (Figure 1). The maximum operating pressure of the system was approximately 1.2 MPa (limited by a safety valve). This pressure was limited by the reagent (gases) amount involved in the synthesis reaction, which ensured the safety of the process.

H_2S gas was added to the reactor by opening tap T_{12B}. During the process, R_1 was heated with a heat gun to facilitate gas admission. After the procedure, T_{12B} and V_3 were closed. The CH_3OH was added by opening V_3 (to the left) and T_{11}, which were subsequently closed. The volume (ml) of CH_3OH used in the synthesis was calculated according to the S amount (g). In the process, the use of CH_3CH_2OH (ethanol) was evaluated as a liquid solution instead of CH_3OH, because it is a non-toxic solvent and requires less care in handling. In sequence, valve V_4 was opened and $^{15}NH_3$ (R_3) under heat was transferred to the reactor. Finally, V_4 and V_2 were closed, R_3 was disconnected and the $^{15}NH_3$ mass (g) was determined by gravimetry.

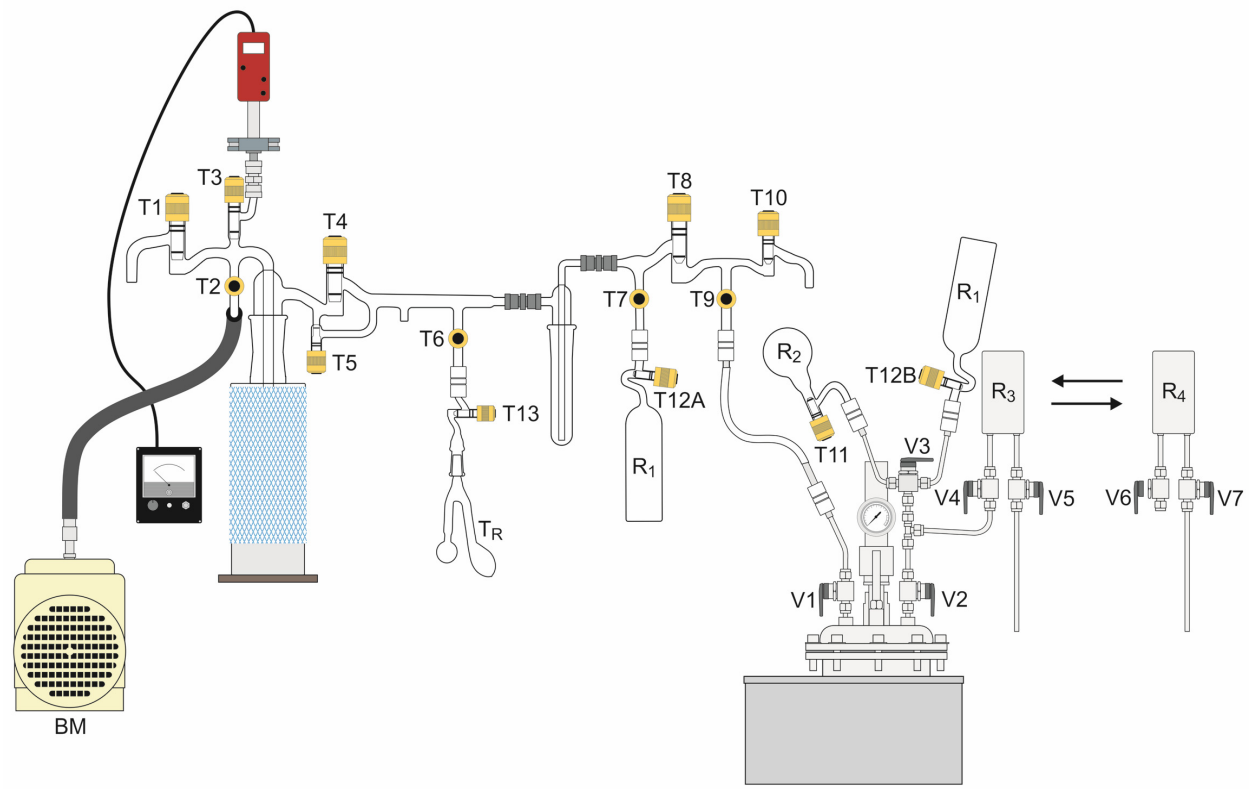

Figure 1: Complete system (glass lines, stainless steel reactor, and stainless steel tubing) used in the production of H_2S (hydrogen sulfide) and in the synthesis of $CO(^{15}NH_2)_2$. BM – mechanical vacuum pump; T_1 to T_{13} – KONTES taps; V_1 and V_7 – stainless steel valves; T_R – glass tube for the reaction of H_2S; R_1 to R_4 – glass and stainless steel reservoirs.

The CO contained in the stainless steel reservoir (R_4) was transferred into the reactor by connecting valve V_6. To facilitate the transfer of the gas (CO), the reactor temperature was maintained at approximately -74 °C, which decreased the reagent vapor pressure ($^{15}NH_3$, H_2S and CH_3OH) contained in the reactor. In sequence, valves V_6 e V_2 were opened and the CO (R_4) was transferred to the reactor. Finally, V_6 and V_2 were closed, R_4 was disconnected and the CO mass (g) was determined by gravimetry.

Synthesis Reaction of $CO(^{15}NH_2)_2$

The chemical reactions that occur in the synthesis process of $CO(^{15}NH_2)_2$, which are based on the reaction of CO, $^{15}NH_3$, and S, include some reactions of interest. A series of possible reactions (intermediate and final) in the production of the compound is given below (Franz and Applegath, 1961).

$$CO + S \rightarrow COS \quad (3)$$

$$COS + 2\,^{15}NH_3 \rightarrow H_2\,^{15}NCOS\,^{15}NH_4 \quad (4)$$

$$H_2\,^{15}NCOS\,^{15}NH_4 \rightarrow H\,^{15}NCO + ^{15}NH_4HS \quad (5)$$

$$^{15}NH_4HS \rightarrow ^{15}NH_3 + H_2S \quad (6)$$

$$H\,^{15}NCO + ^{15}NH_3 \rightarrow CO(^{15}NH_2)_2 \quad (7)$$

In this stage, the reactor was removed from the cooling bath that contained ethanol and CO_2 (s). After reaching room temperature (25 °C), it was placed in a heating system (metallic jacket) under mechanical agitation, as shown in Figure 2. The heating system consisted of heating plates and a temperature controller (thermostat), including a k-type thermocouple placed inside the reactor.

Because the PTFE coating makes thermal

exchange difficult, more time was allowed for the interior temperature to reach the desired value. As previously discussed, for the safety of the process, it was not possible to evaluate reactions at temperatures above the urea melting point (132 ºC) because of the pressure (limited by the safety valve) exerted by the reagent gases in the reactor and different substances formed. The product principal of the reaction is biuret ($NH_2CONHCONH_2$).

At the end of the reaction time, the heating system was turned off, and the reactor was cooled to room temperature (25 ºC).

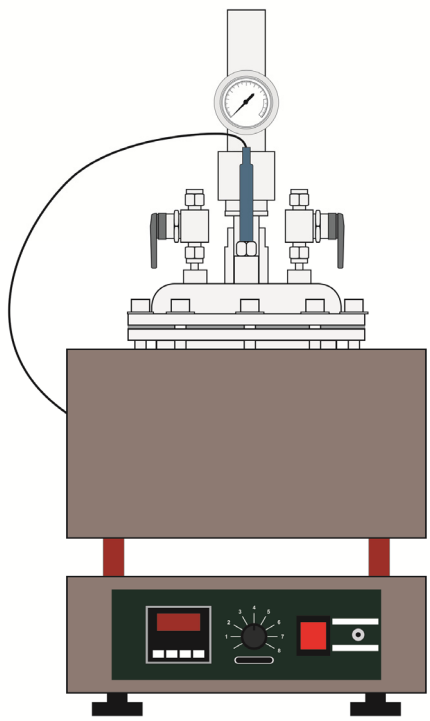

Figure 2: Heating system with temperature controller and mechanical agitator.

Recycling of the Exhaust Gases and Recovery of CH_3OH

The gases inside the reactor, possibly containing ^{15}NOx, CO, $^{15}NH_3$ and H_2S, were removed through valve V_2 with a flow of N_2 (admitted through V_1) and underwent an oxidation process (reaction 8) using H_2O_2 (30%) and NaOH (2 mol L^{-1}) solution. The function of the mixture was to retain H_2S (by-product of the reaction), which is an extremely toxic and flammable gas that should not be released into the atmosphere.

These exhaust gases may also contain possible traces of $^{15}NH_3$ not converted in the syntheses process, which is neutralized in a 1 mol L^{-1} H_2SO_4 solution (reaction 9). The $(^{15}NH_4)_2SO_4$ obtained was reused in the synthesis process.

$$H_2S + 4\ H_2O_2 + 2\ NaOH \rightarrow Na_2SO_4 + 6\ H_2O \qquad (8)$$

$$2\ ^{15}NH_3 + H_2SO_4 \rightarrow (^{15}NH_4)_2SO_4 \qquad (9)$$

At the end of the process, CH_3OH was separated from the mixture containing $CO(^{15}NH_2)_2$ and S. A glass system, connected to valve V_2 was used for the solvent separation process as shown in Figure 3. A thermos bottle containing liquid nitrogen (-196 ºC) was introduced around the trap to retain CH_3OH vapor (formed during the process). The entire operation (recycling) was performed inside a fume hood.

In this separation process, the glass system and reactor pressure was reduced with a mechanical pump (BM) by opening T_{14} and V_2. At the same time, the reactor was heated to 70 °C. At this temperature, the CH_3OH vapor was transferred through the glass system and retained in a cryogenic trap. After approximately 30 min, V_2 and T_{14} were closed, and the BM was turned off. Finally, the solution (CH_3OH and traces of H_2S) obtained in the trap was transferred to an appropriate container to be reused in the $CO(^{15}NH_2)_2$ synthesis

Purification of $CO(^{15}NH_2)_2$

At this stage, the reactor was opened, and the mixture of $CO(^{15}NH_2)$ and S contained inside was removed. The internal wall of the reactor was washed with deionized H_2O, which solubilized the $CO(^{15}NH_2)_2$ and maintained the S in the solid phase because of its low solubility. The S was separated from the $CO(^{15}NH_2)_2$ using a vacuum filter (mechanical) with a glass microfiber (1.6 μm) filter paper and membrane filter of cellulose esters (0.45 μm). The final solution, which contained $CO(^{15}NH_2)_2$ solubilized in H_2O, was heated to 50 ºC, and the final product was obtained in solid form.

The synthesized $CO(^{15}NH_2)_2$ was submitted to a chemical purification process to remove possible impurities, mainly S, acquired during synthesis. For purification, the $CO(^{15}NH_2)_2$ was placed in a beaker, and 50 ml of CH_3COCH_3 was added under agitation. This solution was transferred to the vacuum filtration system using a microfiber filter (1.6 μm) to separate the solvent from the solid compound ($CO(^{15}NH_2)_2$). Finally, the $CO(^{15}NH_2)_2$ was dried (heated to 50 ºC) and the mass (g) synthesized determined by gravimetry.

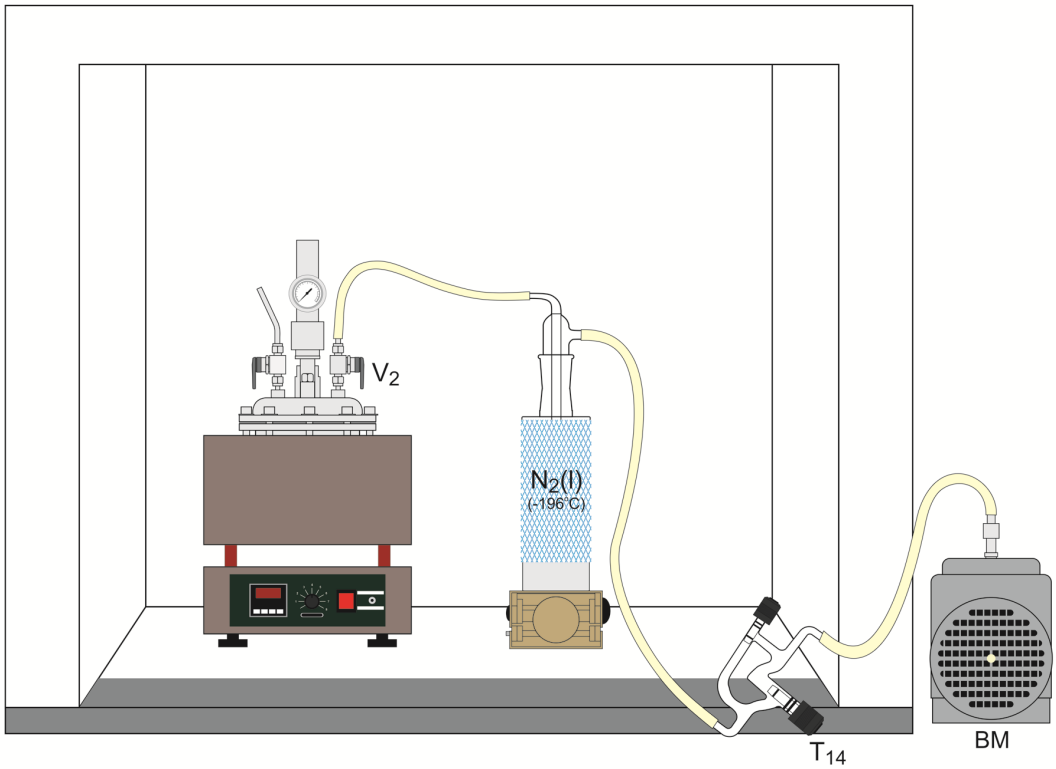

Figure 3: Glass system for the separation of CH_3OH (liquid solution) connected in the synthesis reactor. BM – mechanical vacuum pump; T_{14} – KONTES taps; V_2 – stainless steel valves.

Physico-Chemical and Isotopic Analysis of $CO(^{15}NH_2)_2$

The samples of synthesized $CO(^{15}NH_2)_2$ were subjected to physico-chemical analysis, such as: determination of the N concentration (%) in the system with an automatic analyzer (CF-IRMS: automated nitrogen and carbon analysis – gas, solid, and liquid sample, ANCA-GSL) (Barrie and Prosser, 1996); melting point (°C) (OECD, 1995) and biuret concentration (%) (Ferreira *et al*., 2007).

A $CO(NH_2)_2$ standard of analytical grade with a chemical purity of 99.5% (46.4% N) and a natural isotopic abundance (0.366 at. % ^{15}N) was used in the aforementioned analytical processes to compare the quality of the synthesized material. Before analysis, the synthesized $CO(^{15}NH_2)_2$ samples and standard (P.A) were dried at 65 °C.

To determine the isotope concentration (at. % ^{15}N) in the synthesized $CO(^{15}NH_2)_2$, $^{15}N_2$ (g) (Buchanan and Corcoran, 1957; Frazer and Crawford, 1963) was obtained an analyzed in a ATLAS MAT model CH4 mass spectrometer (Trivelin *et al*., 1973).

Experimental Design

The yield of the $CO(NH_2)_2$ synthesis was determined as a function of the following parameters: amount (0 to 350% excess) of NH_3, CO, and S in the synthesis reaction; reaction time; addition of H_2S; liquid solution and reaction temperature. These tests were performed in triplicate (n = 3) using anhydrous NH_3 with a natural isotopic abundance (0.366 at. % ^{15}N).

First, the yield of the process was studied separately as a function of the limiting reagents (NH_3 and CO/S) in the synthesis reaction; a completely randomized experimental design with three replicates in a factorial layout was performed. In the procedure with CO (1.12 g) and S (1.28 g) as the limiting reagents, the yield of $CO(NH_2)_2$ synthesis was evaluated as a function of the amount (0, 25, 50, 100, 150, 200, 300, and 350% excess) of NH_3 in the synthesis reaction. For NH_3 (limiting reagent with 1.36 g), the yield of the process was evaluated as a function of the amount (0, 25, 50, 100, 150, 200 and 300% excess) of CO and S in the reaction. The amount of 0% NH_3, CO, and S represents the

stoichiometric ratio of the reagents in the overall reaction (2).

The optimum conditions in terms of the ratio between the reagents (NH_3, CO, and S) were used to evaluate the yield of the process as a function of the following parameters: reaction time (60, 90, 120, and 150 min), addition of H_2S (W/H_2S and (N/H_2S) liquid solution (CH_3OH or CH_3CH_2OH), and temperature (80, 90, 100, and 110 °C) of the reaction.

The data obtained were evaluated using analysis of variance and Tukey's multiple comparison of means test with a 5% level of significance. For the analysis of variance, the appropriate model was used for completely randomized experiments with an appropriate factorial arrangement for each of the experiments involving the parameters of the $CO(NH_2)_2$ synthesis process. All statistical analyses were performed using the SAS system (SAS Institute, 2008).

Finally, tests were performed in triplicate to synthesize enriched $CO(^{15}NH_2)_2$ (90 at. % ^{15}N) using the optimal conditions (NH_3 limiting reagent) of the evaluated parameters. This procedure was subjected to economic evaluation to confirm its commercial viability.

RESULTS AND DISCUSSION

Evaluation of the Parameters

It was possible to arrive at the final product of interest using the proposed synthesis system involving the reaction between NH_3, CO, and S with CH_3OH (liquid solution). In the procedure, the reaction temperature was reached after approximately 30 min, at which point the temperature was held constant using a controlled heating system (thermostat/ thermocouple). The internal pressure of the reactor was varied from 0.26 to 1.06 MPa depending on the experimental conditions of the parameters involved in the synthesis. The complete $CO(NH_2)_2$ synthesis process required 8 h of work per batch.

Statistical analyses of the data related to the amount of reagents (NH_3, CO, and S) showed the effects of these factors and their effects on the $CO(NH_2)_2$ synthesis process. Table 1 shows the average results (three replicates) of $CO(NH_2)_2$ synthesis as a function of the amount (0, 25, 50, 100, 150, 200, 300, and 350% excess) of NH_3 added. These tests were performed under the conditions: 1.12 g CO, 1.28 g S, 40 ml CH_3OH, 100 ºC and 150 minutes of reaction, the maximum theoretical production (yield of 100%) was 2.4 g of $CO(NH_2)_2$. According to the data, there was a significant difference (F = 117.66) by Tukey's test at the 5% probability level. This difference was primarily attributed to the presence of NH_3 in two intermediate reactions (4 and 7) of the synthesis mechanism. In addition, the increase in the concentration of NH_3, which was varied from 25% to 350% excess, shifted the equilibrium of the reactions in the direction of the consumption of the reagent and toward the formation of the products (mainly $H_2NCOSNH_4$) following Le Chatelier's principle (Russel, 1994). These alterations in the equilibrium of the reactions resulted in a significant increase of 105.32% (1.00 g of $CO(NH_2)_2$) in the yield of the synthesis process. Thus, under optimal conditions (350% excess), it was possible to obtain an average of 1.82 g of $CO(NH_2)_2$ (75.27% conversion), which is highly significant in relation to the theoretical maximum conversion value (75.7%) that can be obtained with the proposed system (Bendassolli and Victoria, 1995).

The conversion result, based on the synthesis data, was used to calculate the NH_3 and CO mass balance (%). It was possible to recover 59.0% of NH_3 (16.8% used in the synthesis reaction and 42.0% recovered in the form of $(NH_4)_2SO_4$)) with a 41% loss, and to recover 75.4% of CO (incorporated in the $CO(NH_2)_2$ molecule) with a 25% loss. These losses may be related to the formation of undesirable reaction products (CO_2, NO_x) during the synthesis process.

The average results (three replicates) for the synthesis of $CO(NH_2)_2$ as a function of the amount (0, 25, 50, 100, 150, 200 and 300% excess) of CO and S are presented in Table 1. These tests were performed under the conditions: 1.36 g NH_3, 40 ml CH_3OH, 100 ºC and 150 minutes of reaction, the maximum theoretical production (yield of 100%) was 2.4 g of $CO(NH_2)_2$. According to the data, there was a significant difference (F = 94.06) at the 5% probability level (Tukey's test). This fact is mainly attributed to the increase in the concentrations of CO and S, which were varied between an excess of 25 to 300%. These increases shifted the equilibrium of reaction (3) toward the formation of COS (carbonyl sulfide). The reaction for the formation of COS is very rapid in comparison to reaction (4) for obtaining $H_2NCOSNH_4$ (Ferm, 1957). However, in contrast to what was previously mentioned for NH_3, the response to an excess that ranged from 25% to 300% of CO and S was less intense because of the presence of the reagents (CO and S) in only one of the intermediate reactions that formed part of the synthesis mechanism. Thus, a significant increase of 95.7% (0.92 g of $CO(NH_2)_2$) was achieved for the yield. Under optimum conditions (300% excess of the CO and S), an average of 1.64 g of $CO(NH_2)_2$ (68.75% yield) was obtained.

Table 1: Yield of $CO(NH_2)_2$ synthesis as a function of the amount of NH_3 e CO/S (0, 25, 50, 100, 150, 200, 300 and 350% excess) in the global reaction (*n* = 3).

Excess of reagents (%)	Yield ----------(%)----------	
	NH_3	CO/S
0	23.61d	23.63 d
25	36.66 c	35.13 c
50	37.08 c	39.72 bc
100	37.91 c	46.52 b
150	60.41 b	63.47 a
200	62.36 b	59.30 a
300	67.08 ab	68.75 a
350	75.27 a	-
Mean	50.05	50.22
$F_{(NH3)} = 117.66$	$F_{(CO/S)} = 94.06$	CV(%) = 7.51

Measurements followed by different lowercase letters in the rows were significantly different by Tukey's test at a 5% probability level.

The conversion result, based on the synthesis data, was used to calculate the mass balance (%) of NH_3 and CO. There was a recovery of 71.07% of NH_3 (65.67% incorporated into $CO(NH_2)_2$ and 5.4% recovered in the form of $(NH_4)_2SO_4$) with a 28.92% loss. Furthermore, 19.64% of CO (incorporated into $CO(NH_2)_2$) was recovered with a 80.35% loss. The primary reason for the losses in the system may be related to the formation of undesirable molecules (NO_x, CO_2) during $CO(NH_2)_2$ synthesis. These results are important with respect to the goal of establishing the optimum conditions (% NH_3, CO, and S) for the synthesis of ^{15}N-enriched $CO(^{15}NH_2)_2$, which has a high cost (US$ 523.00/g of ^{15}N, FOB price).

Another important point, which is shown in Table 1, is that the results obtained between 150% and 300% excess of CO/S did not differ statistically ($P \geq 0.05$) by Tukey's test. This result was observed because the mass (g) of NH_3, which was the limiting reagent, was essentially consumed in reaction (4) in the formation of $H_2NCOSNH_4$. Results published in the literature indicate that the reaction to obtain $H_2NCOSNH_4$ is the slowest of the synthesis of $CO(NH_2)_2$ (Franz and Applegath, 1961).

In addition, even with the statistically significant differences in the results, the use of a 350% excess of CO/S was not possible because of safety issues and limitations of the safety valve installed on the reactor (1.2 MPa).

The yield (%) of the $CO(NH_2)_2$ synthesis as a function of time (60, 90, 120, and 150 min), addition of H_2S (W/H_2S and N/H_2S), liquid solution (CH_3OH and CH_3CH_2OH), and temperature (80, 90, 100, and 110 °C) of the reaction were all evaluated. These tests were performed in triplicate under the conditions: 1.36, 4.01, and 4.48 g of NH_3, CO, and S, respectively.

The results of $CO(NH_2)_2$ synthesis as a function of time (60, 90, 120, and 150 min) are presented in Table 2. In this table, the values contained in the columns W/H_2S and N/H_2S correspond to the $CO(NH_2)_2$ samples obtained with and without the addition of H_2S, respectively. The tests were performed in triplicate at a temperature of 100 ºC. According to the data, a statistically significant difference (F = 36.20) at the 5% probability level was observed for the evaluated times. These variations led to increases of 27.13% and 28.48% with and without H_2S, respectively, and the increases were due to the difference in the reaction rates that characterize the synthesis mechanism. Reactions (3) and (4), which represent the formation of COS (rapid) and $H_2NCOSNH_4$ (slow), respectively, stand out. The results obtained for a reaction time of 60 min at a temperature of 100 °C differed from the results reported in the literature with a yield of 73% (Franz and Applegath, 1961). An average yield of 80.63% was obtained after a reaction time of 150 min, which is similar to the theoretical value of 81.1%. This result demonstrates that the reaction is close to equilibrium (Bendassolli and Victoria, 1995).

As is evident from the data in Table 2, the average results obtained for 120 and 150 min under the H_2S containing condition (W/H_2S) did not display a statistically significant difference ($P \geq 0.05$), although statistically significant differences were observed for other reaction times. Therefore, the reaction is close to equilibrium after 120 min, which allowed for a reduction of 30 min of the total time (approximately 8 h) per batch. Thus, with a reaction time of 120 min and the W/H_2S condition, approximately 1.90 g of $CO(NH_2)_2$ (79.75% of yield) was obtained.

Table 2: Yield of $CO(NH_2)_2$ synthesis as a function of time (60, 90, 120, and 150 min) of the reaction in the presence of H_2S (W/H_2S and N/H_2S) (*n* = 3).

Time (min)	Yield ----------(%)----------		
	W/H_2S	N/H_2S	
60	58.75 cA	56.08 cA	
90	70.69 bA	64.57 bB	
120	79.75 aA	67.66 bB	
150	80.63 aA	78.42 aA	
Mean	72.46 A	66.70 B	
$F_{(time)} = 36.20$	$F_{(H2S)} = 13.52$	$F_{(time\ x\ H2S)} = 2.11^{ns}$	CV(%) = 5.52

Measurements followed by different lowercase letters in the columns and uppercase letters in the rows were significantly different by Tukey's test at the 5% probability level. W/H_2S and N/H_2S indicate with and without H_2S, respectively.

This result, based on the synthesis data, was used to calculate the mass balance (%) of the main reagents (NH_3 and CO). A recovery of 52.26% of NH_3 (27.75% incorporated into $CO(NH_2)_2$ and 24.51% in the form of $(NH_4)_2SO_4$) was possible with a 47.74% loss, and an 82.59% recovery of CO (incorporated in $CO(NH_2)_2$) with a 17.41% loss.

The influence of temperature (80, 90, 100, and 110 °C) was evaluated with regard to the synthesis yield. The tests were performed in triplicate with 40 mg of H_2S and 150 min of reaction time. According to the data in Table 3, a significant difference (F = 14.00) at the 5% probability level was observed in the yield for the temperatures evaluated. The results show a variation of 8.9% (equal to 0.17 g of $CO(NH_2)_2$) in the synthesis yield, which indicates that the increase in temperature (30 °C) decreased the time for the reaction to reach equilibrium. Additionally, the average results obtained for the reaction temperatures of 100 and 110 °C did not exhibit statistically significant differences ($P \geq 0.05$); however, these values were significantly different from each other. This fact shows that the reaction at 100 °C is very close to equilibrium, which allows a reduction in temperature of the synthesis in relation the conventional methods (temperature of 170 to 200 °C). The mild temperature avoids problems with the reactor (maintenance or material replacements) and decreases the energy costs of the synthesis. Thus, under a temperature of 100 °C, an average yield of 80.63% (equal to 1.92 g of $CO(NH_2)_2$) was obtained.

Finally, the synthesis yield was evaluated in function of the liquid solution (CH_3OH or CH_3CH_2OH) of the reaction. The tests were performed in triplicate with 40 mg of H_2S, 150 min of reaction time and temperature of 100ºC. A greater efficiency was observed for CH_3OH (methanol) in the synthesis process due to some of its characteristics, such as its simpler alcohol structure, greater polarity, and ability to solvate $CO(NH_2)_2$. Thus, the use of CH_3OH resulted in an average increase of 55.6% in yield, with the possibility of obtaining 1.92 g (yield of 80.63%) of $CO(NH_2)_2$ per batch.

Table 3: Yield of $CO(NH_2)_2$ synthesis as a function of temperature (80, 90, 100, and 110 °C) in the synthesis reaction (n = 3).

Temperature (ºC)	Yield (%)
80	74.12 b
90	75.64 b
100	80.63 a
110	81.33 a
Mean	77.93
$F_{(temp)} = 14.00$	CV(%) = 2.76

Measurements followed by different lowercase letters in the rows were significantly different by Tukey's test at the 5% probability level.

Physico-Chemical Analysis

The concentration (%) of N in the synthesized $CO(NH_2)_2$ was determined using a mass spectrometer with automated analyzer (ANCA-GSL). According to the results, in triplicate, the compounds exhibited an average N concentration of 46.09% and good analytical precision (CV = 1.1%). Furthermore, the samples did not display a significant (F = 2.9) difference relative to the P.A. (analytical grade) material.

The average value of the melting point obtained for the synthesized $CO(NH_2)_2$ samples was 132.6 °C, which was mainly due to the efficiency of the vacuum filtration and chemical purification stages that were designed to remove impurities from the synthesis reaction (mainly S). The data obtained, in triplicate, did not display differences between the melting point values of the synthesized samples and the reference sample (P.A.). The reference sample exhibited a melting point of 133.7 °C, which is within the specifications (132–134 °C) provided by the manufacturer.

The synthesized $CO(NH_2)_2$ samples contained an average biuret of 0.55%. In addition, the data show a difference between the synthesized samples relative to the P.A. (analytical grade) sample. This fact was attributed to the rigid quality control of analytical reagents, which must often comply with international specifications (Afonso and Aguiar, 2004). The average concentration of 0.06% biuret in the P.A. sample agrees with the value certified by the supplier, which verifies the efficiency of the analytical method. In Brazil, commercial $CO(NH_2)_2$ contains 46.4% of N, 0.55% biuret, 0.008% free amine, 0.003% ash, and 0.003% iron and lead (Santos, 2006). A concentration of biuret in $CO(NH_2)_2$ greater than 1% is harmful to the majority of plants and may burn their foliage. In the soil, concentrations of biuret greater than 1.5% compromise the germination of seeds (Mithyantha *et al*., 1977; Brasil, 2007). Within this context, the biuret contained in the synthesized samples of $CO(NH_2)_2$ should not interfere with their use in agronomic and animal nutrition studies.

Synthesis of Enriched $CO(^{15}NH_2)_2$ and its Economic Aspects

To prepare $CO(^{15}NH_2)_2$ enriched with the ^{15}N isotope, enriched $^{15}NH_3$ (limiting reagent) was used. In the proposed system, involving the reaction between $^{15}NH_3$, CO and S (1.36, 4.01 and 4.48 g, respectively), 40 mL of CH_3OH and 40 mg of H_2S, it was possible to obtain 1.82 g (76.5% of yield) of $CO(^{15}NH_2)_2$. The entire process, including all of the stages described, required 9 h of work per batch.

In the process there was a recovery of 84.8% of $^{15}NH_3$ [79.0% incorporated in $CO(^{15}NH_2)_2$ and 5.8% recovered in the form of $(^{15}NH_4)_2SO_4$)] with a 15.2% loss (in the form of nitrogen oxides), and recovery of 20.8% of CO (incorporated in $CO(NH_2)_2$) with a loss 79.3%. The loss (15.2%) of $^{15}N\text{-}NO_x$, with enrichment of 90 at. % ^{15}N, has a cost of US$ 15.00 per batch (US$ 72.00/g of $(^{15}NH_4)_2SO_4$).

The concentration (%) of N in the samples of $CO(^{15}NH_2)_2$ was determined as described in section 2.3. According to the results, in triplicate, the compounds enriched with ^{15}N exhibited an average N concentration of 46.11% (chemical purity of 98.94%). The isotopic values of the samples of $CO(^{15}NH_2)_2$ were, on average, 90.4 ± 0.2 at. % ^{15}N, which shows an absence of isotopic fractioning in the process.

An evaluation of the production costs (fixed and variable) was performed for the synthesis of ^{15}N-enriched $CO(^{15}NH_2)_2$. According to the results (Table 4), the production cost of $CO(^{15}NH_2)_2$ with an enrichment of 90.0 at. % ^{15}N was US$ 238.60 per gram, which is less (11%) than the international price (FOB) of US$ 268.00 based on an exchange rate per dollar of R$ 1.80. However, the value of the imported product does not include the fees and taxes applied to international trade, which increase the cost of the compound.

Furthermore, in relation to Table 4, $(^{15}NH_4)_2SO_4$ with an enrichment of 90 at. % ^{15}N, which represents 78% of the production cost of $CO(^{15}NH_2)_2$, was obtained from the Stable Isotopes Laboratory of CENA/USP at a cost approximately 50% less than the international price (FOB).

Table 4: Fixed and variable costs for the production of $CO(^{15}NH_2)_2$ enriched with 90.0 at. % ^{15}N.

Specification	Unit value (US$)	Amount	Investments (US$)		Cost [(a)] (US$)
			Fixed	Variable	
$(^{15}NH_4)_2SO_4$ [(d)]	71.43*	4.7 g		335.72	335.72
Chemical analysis	7.35	1		7.35	7.35
Isotopic analysis	14.70	1		14.70	14.70
Electric energy	0.20	15 kw		3.00	3.00
CO (g)	0.25	4.01 g		1.00	1.00
N_2 (g)	8.82	0.5 m^3		4.41	4.41
Reagents	11.57	1		11.57	11.57
CO_2 (s)	4.11	5 kg		22.05	22.05
Labor technician	1,764.70[(c)]	3 h	1,764.70		30.58
Equipment	11,176.47		11,176.47		1.93**
System maintenance			11,176.47		1.93**
Total Cost					434.24
$CO(^{15}NH_2)_2$ Cost (US$/g)				(Brazil)	238.60
				(FOB)	268.00
Laboratory production: 1.82 g [(b)]					

[(a)] Calculation base: one batch of production obtained in the reactor.
[(b)] 1.82 g of $CO(^{15}NH_2)_2$ enriched with 90.0 at. % ^{15}N.
[(c)] Value refers to the salary of a technician (Range II-A) based on the DRH-USP table (May/2011).
[(d)] $(^{15}NH_2)_4SO_4$ enriched with 90.0 at. % ^{15}N (made in Brazil/CENA-USP)
* Cost value of the product in Brazil (LIE/CENA/USP), dollar R$ 1,80.
** Amortized value for 30 days considering an estimated time of 30 years for the duration of the production system.

CONCLUSIONS

The method employed for the synthesis of $CO(^{15}NH_2)_2$ in a discontinuous process using a stainless steel reactor was adequate. Under the optimum synthesis conditions (1.36, 4.01, and 4.48 g of $^{15}NH_3$, CO, and S, respectively, 40 ml of CH_3OH, 40 mg of H_2S, 100 °C and 120 min of reaction), 1.82 g (yield of 76,5%) of the compound was obtained per batch. The synthesized $CO(^{15}NH_2)_2$ displayed 46.1% of N, melting point of 132.6 °C and 0.55% of biuret. The procedure did not show isotopic fractioning.

The production costs (US$ 238.60 per gram) of $CO(^{15}NH_2)_2$ were competitive with values on the international market (FOB). However, the lack of fees and taxes applied to the imported product should also be considered.

ACKNOWLEDGMENTS

We would like to thank the Stable Isotopes Laboratory for technical support in the execution of this study, the Foundation for Research Support of the State of São Paulo (FAPESP) for financing the research project and for the research grants, and Mr. João Geraldo Brancalion (CENA/USP) for the technical support in the illustrations of the synthesis process.

REFERENCES

Afonso, J. C., Aguiar, R. M., A evolução dos reagentes químicos comerciais através dos rótulos e frascos. Quím. Nova, 27, no. 5, 837-844 (2004). (In Portuguese).

Barrie, A., Prosser, S. J., Automated Analysis of Light-Element Stable Isotopes by Isotope Ratio Mass Spectrometry. In: T. W., Boutton, S. Yamsahi, (Ed.) Mass Spectrometry of Soils. New York, Marcel Dekker, p. 1-46 (1996).

Bendassolli, J. A., Trivelin, P. C. O., Mortatti, J., Victoria, R. L., Síntese de fertilizantes nitrogenados enriquecidos em ^{15}N. Parte II. Síntese de uréia enriquecida em ^{15}N. Nucl. Agr. Energ., 9, no. 2, 94-116 (1989). (In Portuguese).

Bendassolli, J. A, Victoria, R. L., Aspectos termodinâmicos no processo de síntese de uréia, a partir de amônia (NH_3), monóxido de carbono (CO) e Enxofre (S). Quím. Nova, 18, no. 1, 21-25 (1995). (In Portuguese).

Bendassolli, J. A., Trivelin, P. C. O., Junior, F. C., Sulphur stable isotopes separation by anionic exchange chromatography production of compounds enriched in ^{34}S. J. Braz. Chem. Soc., 8, no. 1, 13-17 (1997).

Bendassolli, J. A., Trivelin, P. C. O., Ignoto, R. F., Produção de amônia anidra de aquamônia enriquecida em ^{15}N a partir de $(^{15}NH_4)_2SO_4$. Sci. Agric., 59, no. 3, 595-603 (2002). (In Portuguese).

BRASIL. Ministério da Agricultura, Pecuária e Abastecimento - MAPA. Instrução Normativa nº 05, 23 de fevereiro de 2007. Diário Oficial da União, Brasília, DF (2007). (In Portuguese).

Buchanan, D. L., Corcoran, B. J., Sealed tube combustions for the determination of carbon-14 and total carbon. Anal. Chem., 31, no. 10, 1635-1638 (1957).

Chao, G. T., Urea, its Properties and Manufacture, Chao's Institute. Ed. Taipei, Taiwan, (1967).

Faroni, C. E., Trivelin, P. C. O., Silva, P. H., Bologna, I. R., Vitti, A. C., Franco, H. C. J., Marcação de fitomassa de cana-de-açúcar com aplicação de solução de uréia marcada com ^{15}N, Pesqui. Agropecu. Bras., 42, no. 6, 851-857 (2007). (In Portuguese).

Ferm, R. J., The chemistry of carbonyl sulfide. Chem. Ver., 57, 621-640 (1957).

Ferreira, R. B., Franzini, V. P., Gomes Neto, J. A., Determinação de biureto em uréia agroindustrial por espectrofotometria. Eclét. Quím., 32, no. 1, 43-48 (2007). (In Portuguese).

Franco, J. A. M., Saraiva Neto, A., Produção de fertilizante nitrogenado e suprimento de matéria prima. In: T. Yamada, S. R. S Abdalla, G. C. Vitti, Nitrogênio e Enxofre na Agricultura Brasileira. Ed. IPNI, Piracicaba, (2007). (In Portuguese).

Franz, A. A., Applegath, F. A., New synthesis. I – The reaction of ammonia, carbon monoxide and sulphur. J. Organic Chem., 26, 3306-3308 (1961).

Frazer, J. W., Crawford, R., Modifications in the simultaneous determination of carbon, hydrogen, and nitrogen. Mikrochim. Acta, 3, 561-566 (1963).

Fritz, P., Fontes, J. C., Handbook of Environmental Isotope Geochemistry. Amsterdam (1989).

Gava, G. J. C., Trivelin, P. C. O., Oliveira, M. W., Heinrichs, R., Silva, M. A., Balanço do nitrogênio da uréia (^{15}N) no sistema solo-planta na implantação da semeadura direta na cultura do milho. Bragantia, 65, no. 3, 477-486 (2006). (In Portuguese).

IAEA, International Atomic Energy Agency. Tracer techniques in tropical animal production. IAEA, Vianna, p. 208 (1974).

Karmazinov, N. P., Kroshkin, V. A., Ivanov, G. A., Durov, V. S., Ryvkov, L. G., Pishchalov, N. I., Kulikova, L. I., Corrosion resistance of welded

equipment used in synthesis of urea. Chem. Petrol. Eng., 7, no. 4, 313-316 (1971).

Knowles, R., Blackburn, T. H., Nitrogen Isotope Techniques. Academic Press, San Diego, p. 311 (1993).

Kucheryavyi, V. I., Gorlovskii, D. M., Zinov'ev, G. N., Gorbushenkov, V. A., Equilibrium of the reaction of urea and hydrogen synthesis from carbon monoxide and ammonia. Int. J. Appl. Chem., 49, 2561-2563 (1976).

Lange, A., Bologna, I. R., Faroni, C. E., Trivelin, P. C. O., Aproveitamento pelo trigo do nitrogênio residual da crotalária (*Crotalaria juncea*) e da uréia aplicado ao solo em cultivo precedente. Cienc. Rural, 39, no. 6, 1715-1720 (2009). (In Portuguese).

Martha Junior, G. B., Corsi, M., Trivelin, P. C. O., Vilela, L., Recuperação de ^{15}N-uréia no sistema solo-planta de pastagem de capim-tanzânia. Rev. Bras. Ciênc. Solo, 33, no. 1, 95-101(2009). (In Portuguese).

Mithyantha, M. S., Kulakarni, D. S., Tripathi, S. C., Agnihothrudu, V., Biuret and crop production. Fertilizer News., 20, no. 3, 13-18 (1977).

Monsanto Chemical Company, A new synthesis of urea under mild conditions of pressure e temperature. Hydrocarbon Processing and Petroleum Refiner, 40, 302-307 (1961).

Mcdowell Junior, D. W., Corrosion in urea-synthesis reactors. Chem. Eng., 81, no. 10, 118-124 (1974).

Oliveira, P. P. A., Trivelin, P. C. O., Oliveira, W. S., Balanço do nitrogênio (^{15}N) da uréia nos componentes de uma pastagem de capim-marandu sob recuperação em diferentes épocas de calagem. R. Bras. Zootec., 36, no. 6, 1982-1989 (2007). (In Portuguese).

OECD, (Organization for Economic Co-operation and Development) Guidelines for the Testing of Chemicals. Test No. 102: Melting Point/Melting Range. Paris (1995).

Russel, J. B., Química Geral. Tradução e revisão técnica de Márcia Guekezian. 2nd (Ed.) Makron Books, São Paulo, (1994). (In Portuguese).

Sant Ana Filho, C. R., Bendassolli, J. A., Rossete, A. L. R. M., Piedade, S. M. S., Prestes, C. V., Production of ^{15}N-enriched nitric acid ($H^{15}NO_3$). Braz. J. Chem. Eng., 25, no. 4, 743-749 (2008).

Santos, F. A. P., Metabolismo das proteínas. In: T. T. Berchielli, A. V. Pires, S. G. Oliveira, Nutrição de Ruminantes. Jabuticabal: FUNEP, p. 255-284 (2006). (In Portuguese).

SAS Institute, The SAS System [Programa de Computador]. version 9.2. Cary, NC: SAS Institute Inc., (2008).

Stamicarbon, S., Stamicarbon Carbon Dioxide Stripping Urea Process. Handbook of Chemicals Production Processes, Meyers, R. A., (Ed.) McGraw-Hill, New York, Section 3.11. (1986)

Stinson, J. M., Meeting of February 25 on production of ^{15}N-enriched and ^{15}N-Depleted fertilizers. p. 9 (1975).

Trivelin, P. C. O., Salati, E., Matsui, E., Preparo de amostras para análise de ^{15}N por espectrometria de massas. Boletim Técnico, Piracicaba: CENA, p. 41 (1973). (In Portuguese).

Trivelin, P. C. O., Vitti, A. C., Oliveira, M. W., Gava, G. J. C., Sarriés, G. A., Utilização de nitrogênio e produtividade da cana-de-açúcar (cana-planta) em solo arenoso com incorporação de resíduos da cultura. Rev. Bras. Ciênc. Solo, 26, no. 3, 636-646 (2002). (In Portuguese).

Uchino, H., Toyo Urea Process-Advanced Process for Cost and Energy Savings, In Handbook of Chemicals Production Processes, R. A. Meyers, (Ed.) McGraw-Hill, New York, Section 3.12. (1986).

Zhao, F. J., Verkampen, K. C. J., Birdsey, M., Blake-Kalff, M. M. A., Macrath, S. P., Use of the enriched stable isotope ^{34}S to study sulphur uptake and distribution in wheat. J. Plant. Nutr., 24, no. 10, 1551-1560 (2001).